email: info@AngleDetailing.com

*NOTE: SHOP TO FORM
X3A-6 AND X3A-7 TO FIT X3A-8
AND X3A-4 AND X3A-5

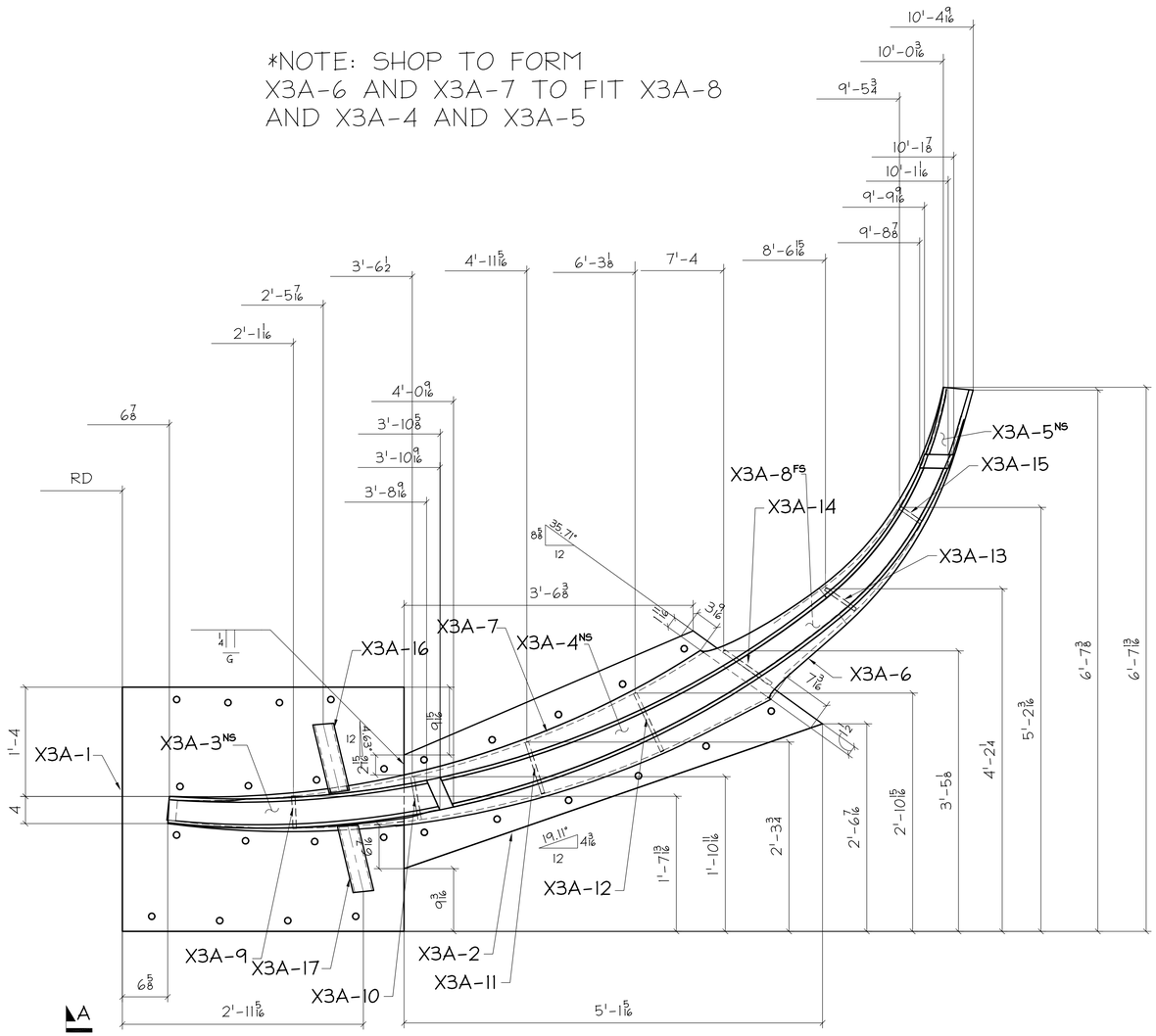

PEDESTAL ASSEMBLY

PLAN VIEW

*NOTE:
SCRIBELINES PROVIDED
ON MKS X3A-1,X3A-2,X3A-6 & X3A-7
FOR LOCATING INTERNAL PLATES

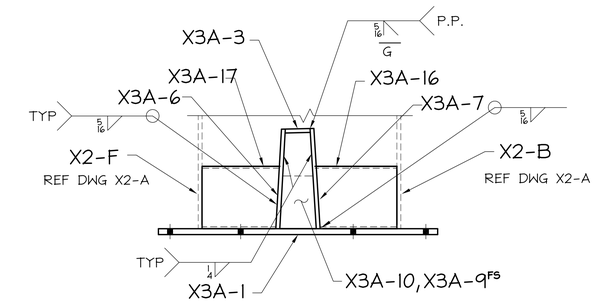

SECTION B

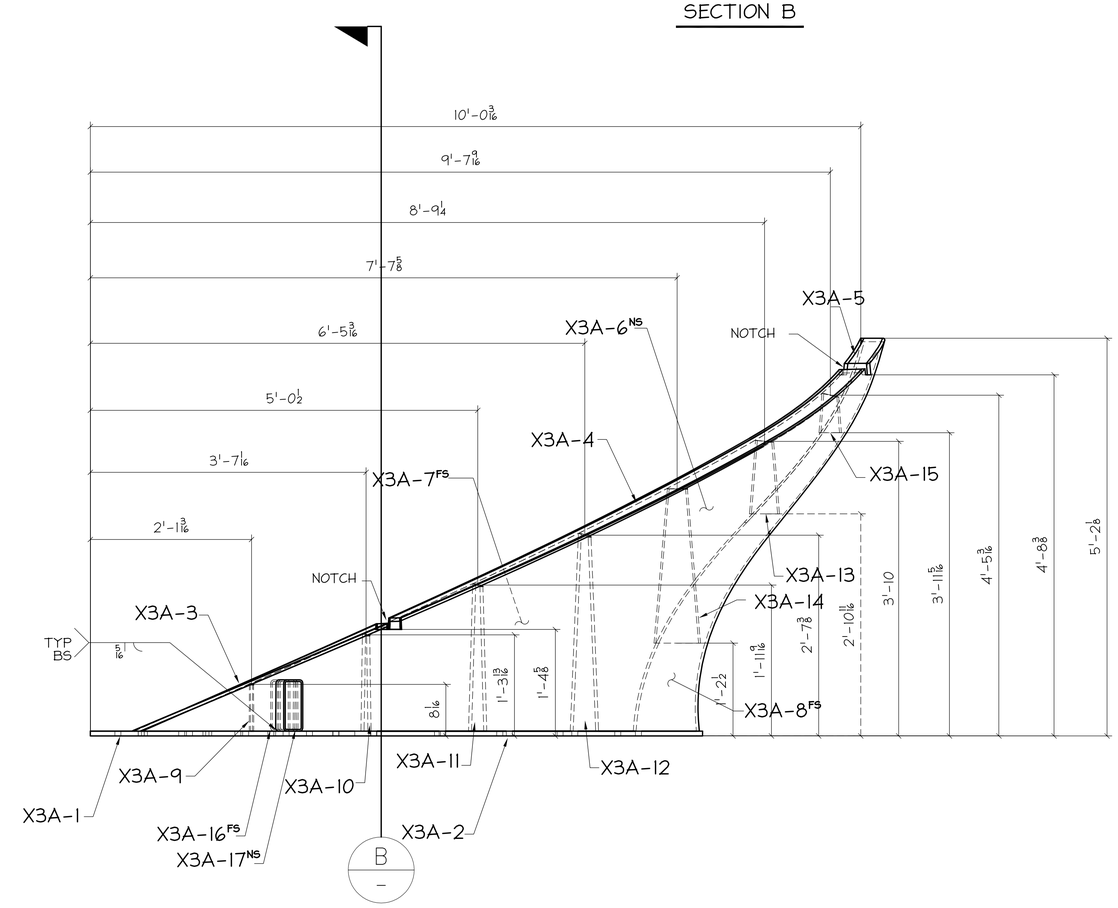

SECTION A

STAIR PEDESTAL ELEVATION VIEW

VERIFICATION OF DIMENSIONS, DETAILS, AND ETC. ARE REQUESTED WHERE INDICATED. IF EACH VERIFICATION IS NOT NOTED OTHERWISE, IT WILL BE ASSUMED TO BE CORRECT AS SHOWN

REV	DATE	BY	DESCRIPTION	DWG STATUS	DATE
				FOR FABRICATION	
				FOR FABRICATION	
1	6/27/01	BB	ISSUE FOR FABRICATION	FOR PURCHASING	
A	5/17/00	BB	FOR APPROVAL	FOR APPROVAL	

STAIR PEDESTAL
FOX TOWER
PORTLAND, OREGON

ENG'R: SWMB — ADI / ANGLE DETAILING, INC.
CONT'R: HOFFMAN — ADI JOB# 2000-015

COLUMBIA WIRE & IRON WORKS
5555 N. Channel Portland, Ore. 97217
www.cwil.com/503-286-6600

DRAWN BY: PJR | CHK'D BY: BB | JOB NO: 15-046001 | DWG. NO: X3-A

C:\NEW_WEB_PAGE\FOX-TOWER-STAIR\PDF\X3-A.DWG 11/20/01 9:33am SOLARIS melissa