email: info@AngleDetailing.com

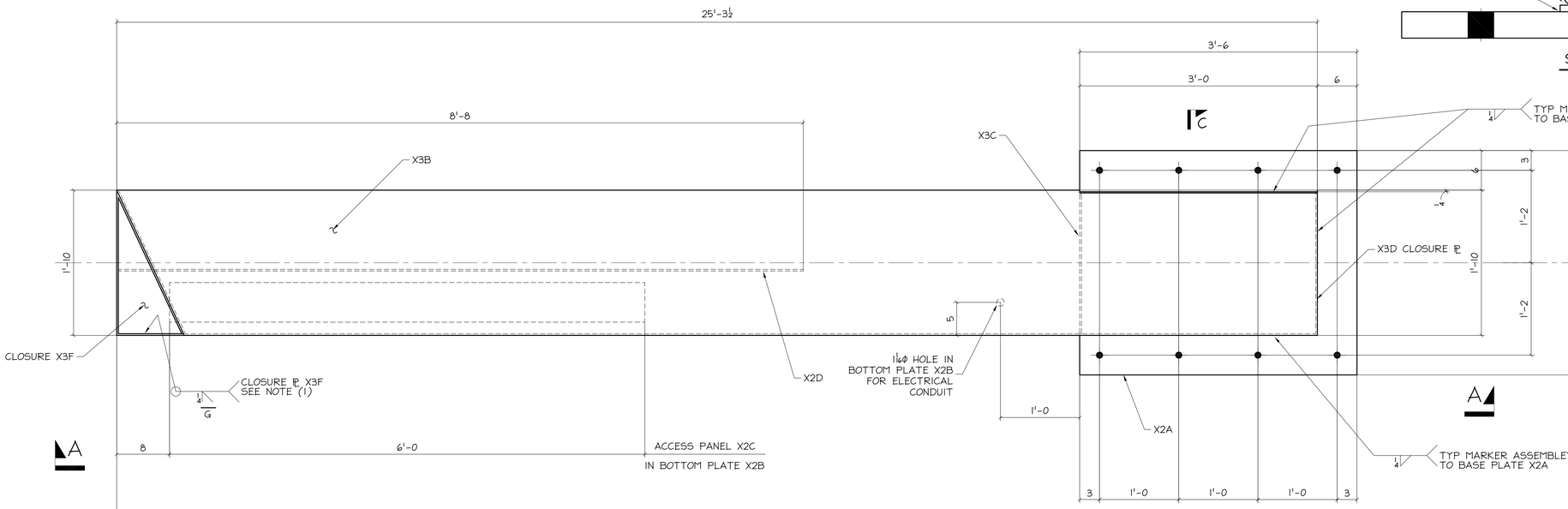

ONE ~ ENTRY MARKER PLAN ~ 1A

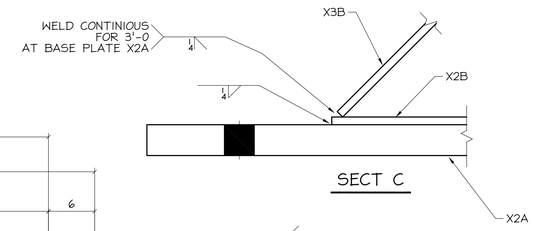

SECT C

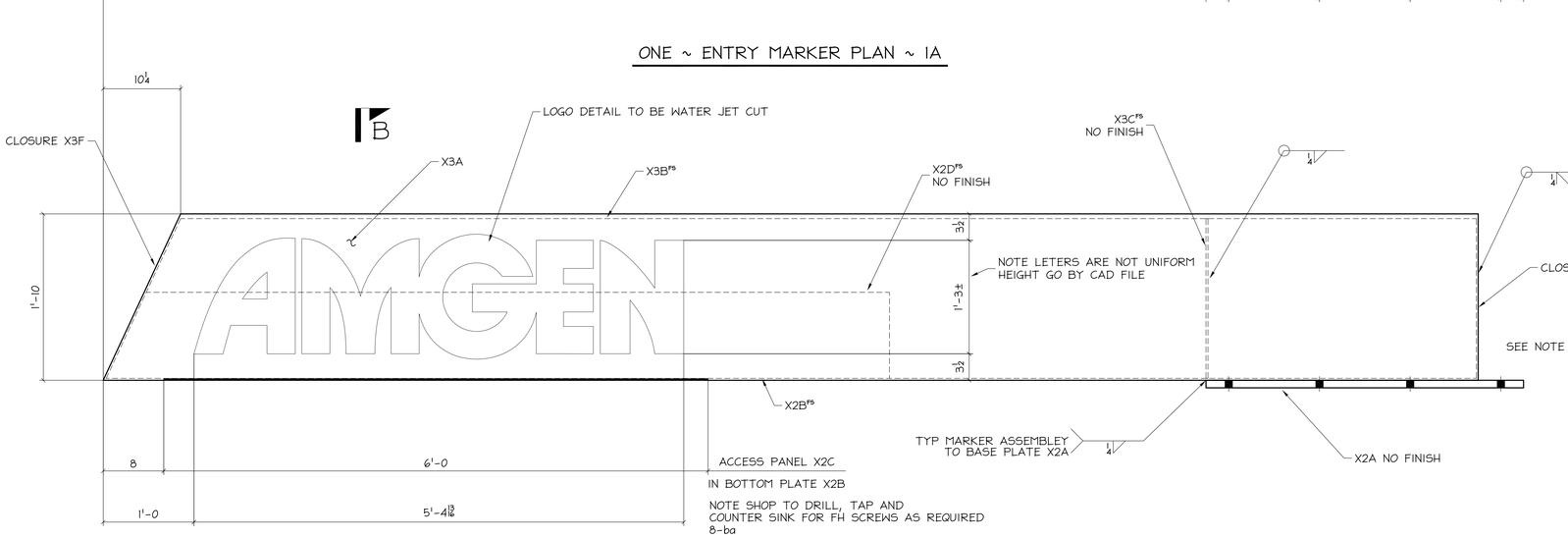

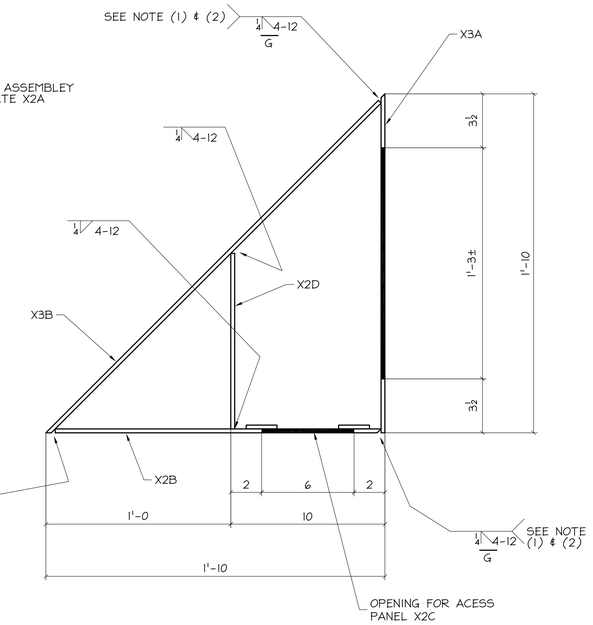

SECT B

NOTES:
1) FINISH WELD TO BE RANDOM ORBITAL
2) FILL IN GAPS AND WELD TO FINISH MATCH W/ℙ

SECT. A-A
ENTRY MARKER ELEVATION

BILL OF MATERIAL

NO. to SHIP	SHIP MARK	TOTAL No Pc	PC MARK	DESCRIPTION	LENGTH FT.	LENGTH IN.	REMARKS	ADV. BILL	WEIGHT UNIT	WEIGHT TOTAL
ONE	1A			ENTRY MARKER						
		1	X2A	BASE ℙ			SEE DWG 2			
		1	X2B	BOTTOM ℙ			SEE DWG 2			
		1	X2C	ACCESS PANEL			SEE DWG 2			
		1	X2D	INTERNAL STIFFENER			SEE DWG 2			
		1	X3A	ENTRY MARKER LOGO ℙ			SEE DWG 3			
		1	X3B	BACK ℙ			SEE DWG 3			
		1	X3C	INTERNAL STIFFENER			SEE DWG 3			
		1	X3D	CLOSURE ℙ			SEE DWG 3			
		1	X3F	CLOSURE ℙ			SEE DWG 3			
		8	ba	FLAT HEAD SCREWS			AS REQUIRED FOR ACESS PANNEL	X2C		

BILL OF MATERIAL

NO. to SHIP	SHIP MARK	TOTAL No Pc	PC MARK	DESCRIPTION	LENGTH FT.	LENGTH IN.	REMARKS	ADV. BILL	WEIGHT UNIT	WEIGHT TOTAL
ONE	1B			TEMPLATE						
		1	a	ℙ⅛ x 34	3	9	MILD STEEL			
8	1C			J-BOLTS			304 STAINLESS NO FINISH			
		8	b	¾ϕ x 1'-4 W/4" HOOK			304 STAINLESS NO FINISH			
		8	c	¾ϕ HVY HEX NUTS			304 STAINLESS NO FINISH			
		8	d	¾ϕ ½-NUTS/LEVLEING			304 STAINLESS NO FINISH			
		8	f	¾ϕ WASHERS			304 STAINLESS NO FINISH			

SHIPPED

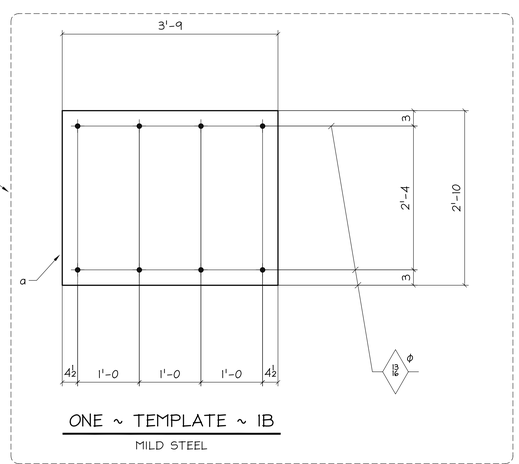

ONE ~ TEMPLATE ~ 1B
MILD STEEL

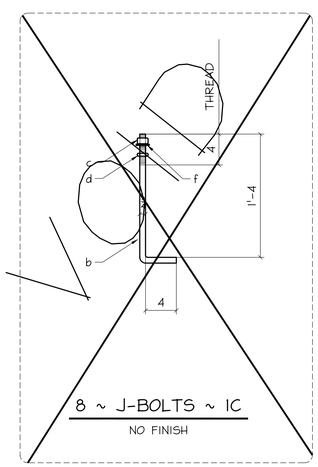

8 ~ J-BOLTS ~ 1C
NO FINISH

FABRICATION NOTES:	
HOLES UNO:	
WELD:	
REF DWG: EI	
MATERIAL UNO: GRADE 304 STAINLESS	
PAINT:	
NOTES: FINISH: RANDOM ORBITAL(UNO) W/ CLEAR COAT	VERIFICATION OF DIMENSIONS, DETAILS, AND ETC. ARE REQUESTED, WHERE INDICATED. IF EACH VERIFICATION IS NOT NOTED OTHERWISE, IT WILL BE ASSUMED TO BE CORRECT AS SHOWN.

REV	DATE	BY	DESCRIPTION	DWG STATUS	DATE
				FOR FABRICATION	
				FOR FABRICATION	
2	11/10/03	GA	UPDATE FINISH / ISSUE FOR FABRICATION	FOR PURCHASING	
1	11/6/03	GA	IFF - TEMPLATE ONLY	FOR APPROVAL	

HELIX PROJECT
ENTRY MARKER
SEATTLE , WASHINGTON

ENG'R: kpff
CONT'R:
ADI / ANGLE DETAILING, INC.
ADI JOB# 2003-317

COLUMBIA WIRE & IRON WORKS
5555 N. Channel Portland, Ore. 97217
www.cwii.com/503-286-6600

DRAWN BY:	CHKD BY:	JOB NO:	DWG. NO:
ga	GBA	67-004001	1

J:\2003-317\ADI_SUBMITTALS_-RECORD-\12222003-CURRENT\1.DWG 12/24/03 9:47am EUROPA melissa